**Light efficiency:**

**2 Lumen/Watt**

**Light quality:**

**CRI: 0.0**

**Color temperature:**

**0 K**

**133.3°**

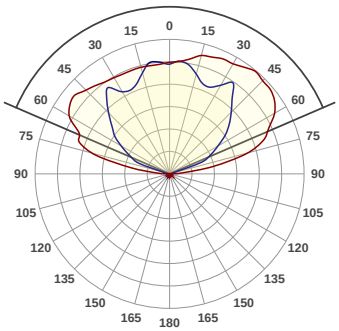

**Product name:**

## Eco UV Bar Plus IR

**Test:**

**Date:**

**7/17/2017**

**Output: 86.6 lm  Power consumption: 48.8 W  Peak: 26.4 cd**

**Spectral distribution**

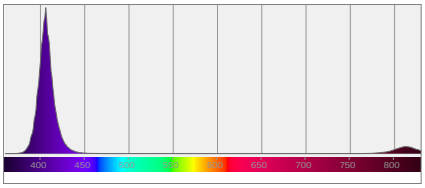


**Color coordinates**

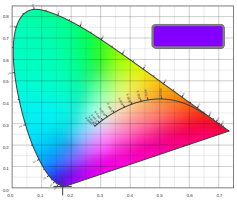

**Zoom color point**

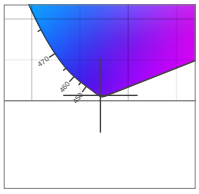

**CRI R values**

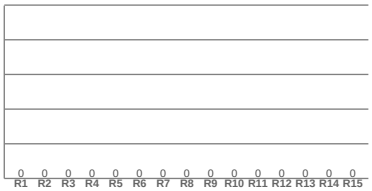


| Color temperature | Color rendering index | Red component | Color fidelity | Color gamut | Color quality scale | Color coordinate cie 1931 | Color coordinate cie 1931 | Color coordinate | Color coordinate | Color diviation from black body |
|---|---|---|---|---|---|---|---|---|---|---|
| CCT | CRI | CRI R9 | TM30 Rf | TM30 Rg | CQS | x | y | u | v | Δuv |
| 0 K | 0.0 | 0.0 | 0.0 | 0.0 | 0.0 | 0.171 | 0.007 | 0.250 | 0.014 | n/a |

## Beam details

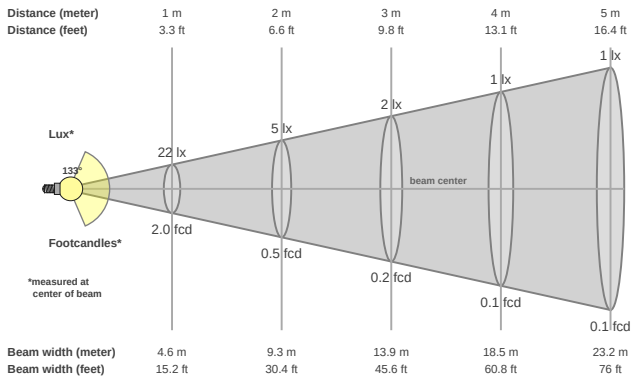


### Beam angels

| Beam angle 50% | Field angle 10% | Cutoff angle 2,5% |
|---|---|---|
| 133.3° | 159° | 240.6° |

### Beam intensities

| Peak intensity | Int. ratio in 120° cone | Int. ratio in 90° cone |
|---|---|---|
| 26.4 cd | 0.7% | 0.4% |

### Power

| Power | Power factor | Power frequency |
|---|---|---|
| 48.8 W | 0.99 | 60 Hz |

| Nominal voltage | Voltage | Current |
|---|---|---|
| 230 V | 114 V | 0.430 A |

### Beam intensities from 1-20m

| 1m | 2m | 3m | 4m | 5m | 6m | 7m | 8m | 9m | 10m | 11m | 12m | 13m | 14m | 15m | 16m | 17m | 18m | 19m | 20m |
|---|---|---|---|---|---|---|---|---|---|---|---|---|---|---|---|---|---|---|---|
| 3.3ft | 6.6ft | 9.8ft | 13.1ft | 16.4ft | 19.7ft | 23ft | 26.2ft | 29.5ft | 32.8ft | 36.1ft | 39.4ft | 42.7ft | 45.9ft | 49.2ft | 52.5ft | 55.8ft | 59.1ft | 62.3ft | 65.6ft |
| 22lx | 5lx | 2lx | 1lx | 1lx | 1lx | 0lx | 0lx | 0lx | 0lx | 0lx | 0lx | 0lx | 0lx | 0lx | 0lx | 0lx | 0lx | 0lx | 0lx |
| 2fcd | 0.5fcd | 0.2fcd | 0.1fcd | 0.1fcd | 0.1fcd | 0fcd | 0fcd | 0fcd | 0fcd | 0fcd | 0fcd | 0fcd | 0fcd | 0fcd | 0fcd | 0fcd | 0fcd | 0fcd | 0fcd |