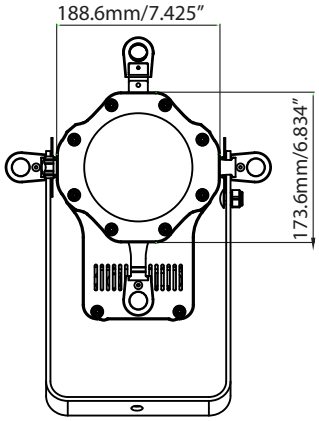
188.6mm/7.425″
173.6mm/6.834″

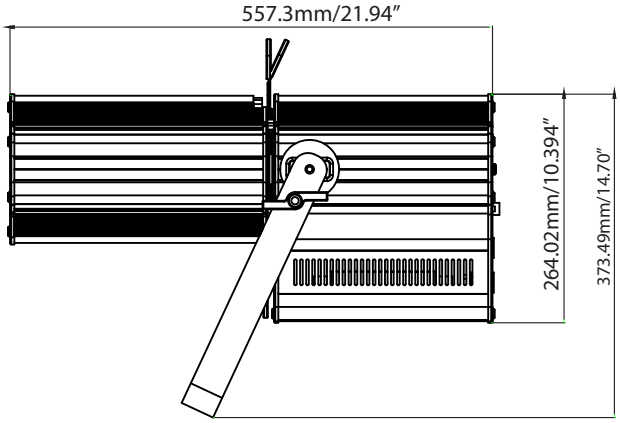
557.3mm/21.94″
264.02mm/10.394″
373.49mm/14.70″